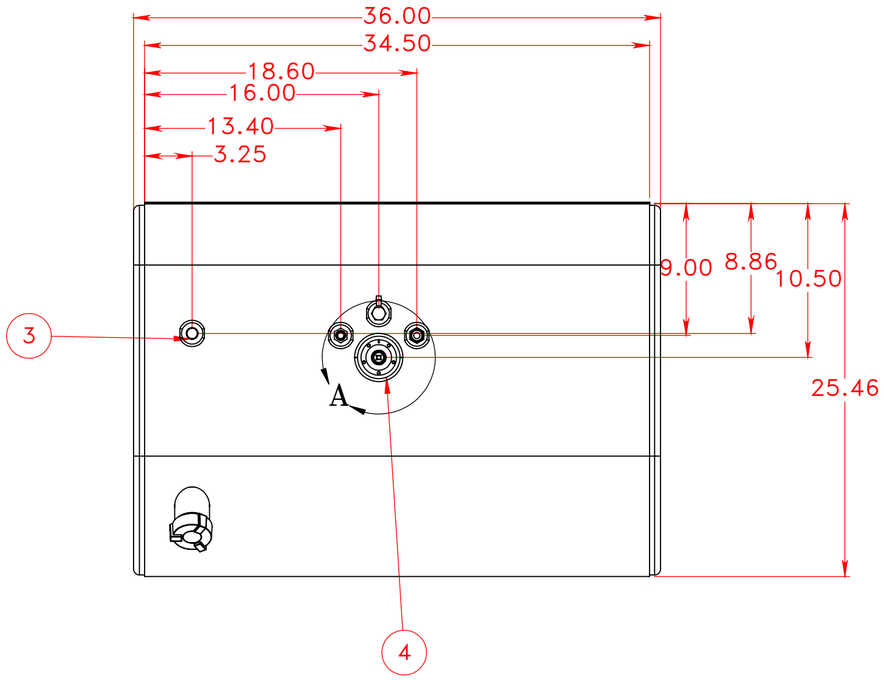

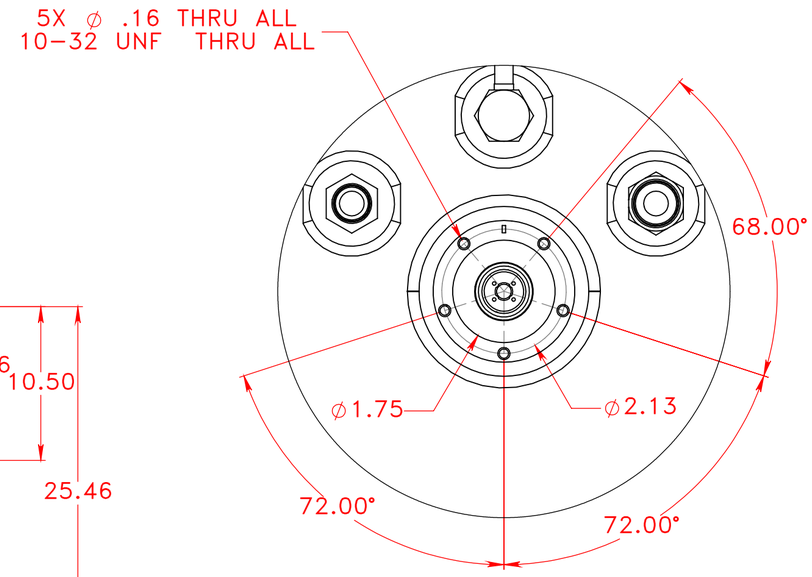

DETAIL A
SCALE 1 : 2

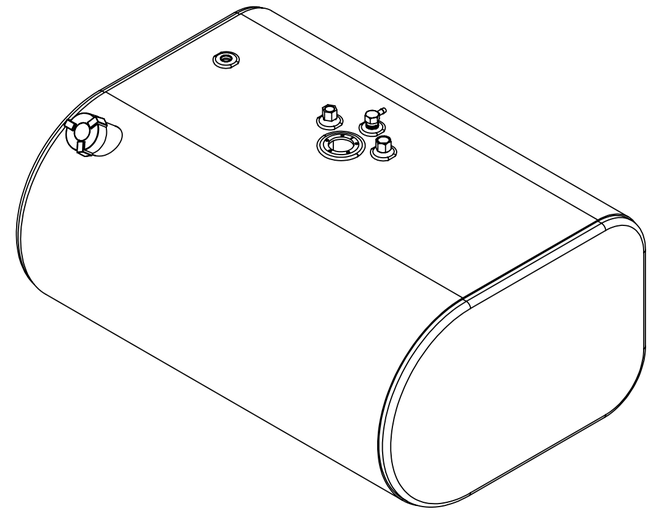

NOTES FOR STANDARD CONSTRUCTION:
...MEETS FMCSA REQUIREMENTS.
...PRESSURE TESTED @ 5psi
...INTERIOR FREE OF FOREIGN MATTER.
...FILLER CAP, DRAIN PLUG & VENT PROVIDED.
...REPLACEABLE DRAW TUBE
...ALUMINUM CONSTRUCTION:
5052-H32 ALUMINUM, BRIGHT FINISH
HEADS ARE 0.100" & SHELL IS 0.187"
...ALL OPENINGS PLUGGED PRIOR TO SHIPPING

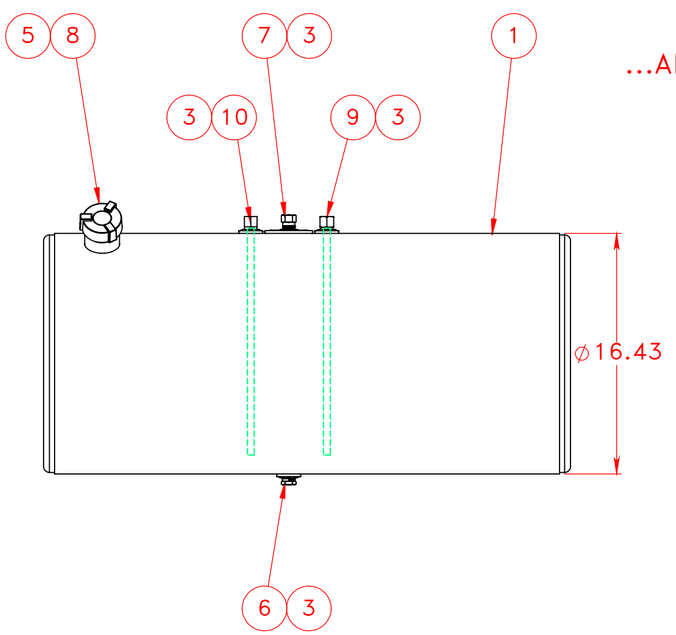

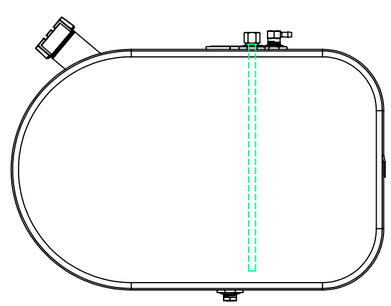

ITEM NO.	PART NUMBER	DESCRIPTION	QTY.
1	116-0409	1/8" Auminum Wrap	1
2	160-0041	16x25 D Head	2
3	260-0005	1/2" FNPT Aluminum weld flange	5
4	265-0010	Aluminum Float Riser	1
5	316-0004	2" Aluminum Filler Neck	1
6	458-0100	1/2" NPT Ball Check Drain Plug	1
7	454-0937	1/2" NPT Ball Check Vent	1
8	452-0998	2" Thermal Relief Fuel Cap	1
9	490-0016-Z	1/2" NPT Down Tube	1
10	491-0016-Z	3/8" FNPT X 1/2" NPT 1/2" Down Tube	1

PROPRIETARY AND CONFIDENTIAL
THE INFORMATION CONTAINED IN THIS DRAWING IS THE SOLE PROPERTY OF PROPOWER MFG. INC. ANY REPRODUCTION IN PART OR AS A WHOLE WITHOUT THE WRITTEN PERMISSION OF PROPOWER MFG. INC. IS PROHIBITED.

UNLESS OTHERWISE SPECIFIED:
DIMENSIONS ARE IN INCHES
TOLERANCES:
FRACTIONAL ± 1/16
ANGULAR: MACH ± 1° BEND ± 1°
TWO PLACE DECIMAL ± .06
THREE PLACE DECIMAL ± .031
INTERPRET GEOMETRIC TOLERANCING PER:
MATERIAL ALUMINUM
FINISH
DO NOT SCALE DRAWING

	NAME	DATE
DRAWN	A.B	12/12/13
CHECKED		
ENG APPR.		
MFG APPR.		
Q.A.		

COMMENTS:
THIRD ANGLE PROJECTION

PROPOWER MFG. INC.
WINDSOR, ONTARIO, CANADA
Ph; 519-737-1197 Fax; 519-737-1918
TOLL FREE 1-877-741-2365 Web; metaltanks.com

TITLE:
FD-L16-25DFA36
57 US GROSS GALLONS
55 USEBLE GALLONS
DIESEL FUEL TANK

SIZE C | DWG. NO. 16162-1 | REV
SCALE: 1:8 | WEIGHT: 37 lbs | SHEET 1 OF 2